SECTION IP

INSTRUMENT PANEL

CONTENTS

PRECAUTIONS **2**
Precautions for Supplemental Restraint System (SRS) “AIR BAG” and “SEAT BELT PRE-TENSIONER” 2
Precautions 2
PREPARATION **3**
Special Service Tools 3
Commercial Service Tools 3
SQUEAK AND RATTLE TROUBLE DIAGNOSES **4**
Work Flow 4
CUSTOMER INTERVIEW 4
DUPLICATE THE NOISE AND TEST DRIVE 5
CHECK RELATED SERVICE BULLETINS 5
LOCATE THE NOISE AND IDENTIFY THE ROOT CAUSE 5
REPAIR THE CAUSE 5
CONFIRM THE REPAIR 6
Generic Squeak and Rattle Troubleshooting 6
INSTRUMENT PANEL 6
CENTER CONSOLE 6
DOORS 6
TRUNK 7
SUNROOF/HEADLINING 7
SEATS 7
UNDERHOOD 7
Diagnostic Worksheet 8
INSTRUMENT PANEL ASSEMBLY **10**
Component Parts Location 10
Removal and Installation 11
WORK ITEM TABLE 11
REMOVAL 12
INSTALLATION 18
Disassembly and Assembly 19
CENTER CONSOLE 19

PRECAUTIONS

PFP:00001

Precautions for Supplemental Restraint System (SRS) “AIR BAG” and “SEAT BELT PRE-TENSIONER”

AIS005SO

The Supplemental Restraint System such as “AIR BAG” and “SEAT BELT PRE-TENSIONER”, used along with a front seat belt, helps to reduce the risk or severity of injury to the driver and front passenger for certain types of collision. Information necessary to service the system safely is included in the SRS and SB section of this Service Manual.

WARNING:

- **To avoid rendering the SRS inoperative, which could increase the risk of personal injury or death in the event of a collision which would result in air bag inflation, all maintenance must be performed by an authorized NISSAN/INFINITI dealer.**
- **Improper maintenance, including incorrect removal and installation of the SRS, can lead to personal injury caused by unintentional activation of the system. For removal of Spiral Cable and Air Bag Module, see the SRS section.**
- **Do not use electrical test equipment on any circuit related to the SRS unless instructed to in this Service Manual. SRS wiring harnesses can be identified by yellow and/or orange harnesses or harness connectors.**

Precautions

AIS005SP

- Disconnect both battery cables in advance.
- Disconnect air bag system line in advance.
- Never tamper with or force air bag lid open, as this may adversely affect air bag performance.
- Be careful not to scratch pad and other parts.
- When removing or disassembling any part, be careful not to damage or deform it. Protect parts, which may get in the way with cloth.
- When removing parts with a screwdriver or other tool, protect parts by wrapping them with vinyl or tape.
- Keep removed parts protected with cloth.
- If a clip is deformed or damaged, replace it.
- If an unreusable part is removed, replace it with a new one.
- Tighten bolts and nuts firmly to the specified torque.
- After re-assembly has been completed, make sure each part functions correctly.
- Remove stains in the following way.

Water-soluble stains:
Dip a soft cloth in warm water, and then squeeze it tightly. After wiping the stain, wipe with a soft dry cloth.
Oil stain:
Dissolve a synthetic detergent in warm water (density of 2 to 3% or less), dip the cloth, then clean off the stain with the cloth. Next, dip the cloth in fresh water and squeeze it tightly. Then clean off the detergent completely. Then wipe the area with a soft dry cloth.

- Do not use any organic solvent, such as thinner or benzine.

PREPARATION

PFP:00002

Special Service Tools

AIS00661

The actual shapes of Kent-Moore tools may differ from those of special service tools illustrated here.

Tool number (Kent-Moore No.) Tool name		Description
(J-39570) Chassis ear	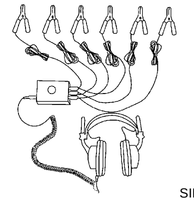 SIIA0993E	Locating the noise
(J-43980) NISSAN Squeak and Rattle Kit	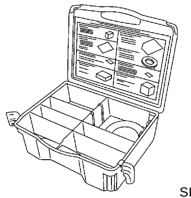 SIIA0994E	Repairing the cause of noise

Commercial Service Tools

AIS005SQ

Tool name		Description
Engine ear	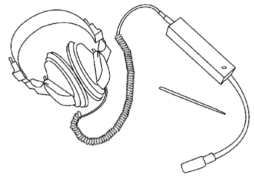 SIIA0995E	Locating the noise
Power tool	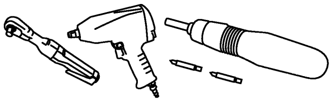 PIIB1407E	

SQUEAK AND RATTLE TROUBLE DIAGNOSES

PFP:00000

Work Flow

AIS0061A

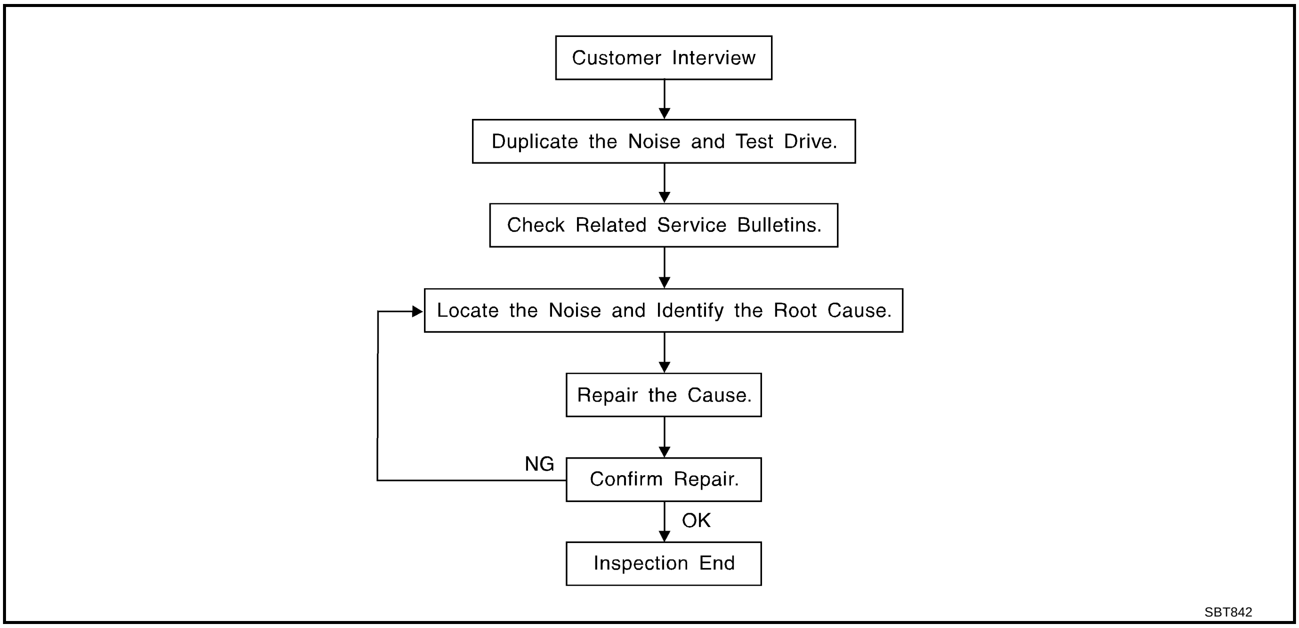

CUSTOMER INTERVIEW

Interview the customer if possible, to determine the conditions that exist when the noise occurs. Use the Diagnostic Worksheet during the interview to document the facts and conditions when the noise occurs and any customer's comments; refer to IP-8, "Diagnostic Worksheet" . This information is necessary to duplicate the conditions that exist when the noise occurs.

- The customer may not be able to provide a detailed description or the location of the noise. Attempt to obtain all the facts and conditions that exist when the noise occurs (or does not occur).
- If there is more than one noise in the vehicle, be sure to diagnose and repair the noise that the customer is concerned about. This can be accomplished by test driving the vehicle with the customer.
- After identifying the type of noise, isolate the noise in terms of its characteristics. The noise characteristics are provided so the customer, service adviser and technician are all speaking the same language when defining the noise.
- Squeak —(Like tennis shoes on a clean floor)
  Squeak characteristics include the light contact/fast movement/brought on by road conditions/hard surfaces=higher pitch noise/softer surfaces=lower pitch noises/edge to surface=chirping
- Creak—(Like walking on an old wooden floor)
  Creak characteristics include firm contact/slow movement/twisting with a rotational movement/pitch dependent on materials/often brought on by activity.
- Rattle—(Like shaking a baby rattle)
  Rattle characteristics include the fast repeated contact/vibration or similar movement/loose parts/missing clip or fastener/incorrect clearance.
- Knock —(Like a knock on a door)
  Knock characteristics include hollow sounding/sometimes repeating/often brought on by driver action.
- Tick—(Like a clock second hand)
  Tick characteristics include gentle contacting of light materials/loose components/can be caused by driver action or road conditions.
- Thump—(Heavy, muffled knock noise)
  Thump characteristics include softer knock/dead sound often brought on by activity.
- Buzz—(Like a bumble bee)
  Buzz characteristics include high frequency rattle/firm contact.
- Often the degree of acceptable noise level will vary depending upon the person. A noise that you may judge as acceptable may be very irritating to the customer.
- Weather conditions, especially humidity and temperature, may have a great effect on noise level.

DUPLICATE THE NOISE AND TEST DRIVE

If possible, drive the vehicle with the customer until the noise is duplicated. Note any additional information on the Diagnostic Worksheet regarding the conditions or location of the noise. This information can be used to duplicate the same conditions when you confirm the repair.
If the noise can be duplicated easily during the test drive, to help identify the source of the noise, try to duplicate the noise with the vehicle stopped by doing one or all of the following:

1) Close a door.
2) Tap or push/pull around the area where the noise appears to be coming from.
3) Rev the engine.
4) Use a floor jack to recreate vehicle “twist”.
5) At idle, apply engine load (electrical load, half-clutch on M/T models, drive position on A/T models).
6) Raise the vehicle on a hoist and hit a tire with a rubber hammer.

- Drive the vehicle and attempt to duplicate the conditions the customer states exist when the noise occurs.
- If it is difficult to duplicate the noise, drive the vehicle slowly on an undulating or rough road to stress the vehicle body.

CHECK RELATED SERVICE BULLETINS

After verifying the customer concern or symptom, check ASIST for Technical Service Bulletins (TSBs) related to that concern or symptom.
If a TSB relates to the symptom, follow the procedure to repair the noise.

LOCATE THE NOISE AND IDENTIFY THE ROOT CAUSE

1. Narrow down the noise to a general area. To help pinpoint the source of the noise, use a listening tool (Chassis Ear: J-39570, Engine Ear and mechanics stethoscope).
2. Narrow down the noise to a more specific area and identify the cause of the noise by:

- removing the components in the area that you suspect the noise is coming from.
  Do not use too much force when removing clips and fasteners, otherwise clips and fastener can be broken or lost during the repair, resulting in the creation of new noise.
- tapping or pushing/pulling the component that you suspect is causing the noise.
  Do not tap or push/pull the component with excessive force, otherwise the noise will be eliminated only temporarily.
- feeling for a vibration with your hand by touching the component(s) that you suspect is (are) causing the noise.
- placing a piece of paper between components that you suspect are causing the noise.
- looking for loose components and contact marks.
  Refer to IP-6, "Generic Squeak and Rattle Troubleshooting" .

REPAIR THE CAUSE

- If the cause is a loose component, tighten the component securely.
- If the cause is insufficient clearance between components:
  - separate components by repositioning or loosening and retightening the component, if possible.
  - insulate components with a suitable insulator such as urethane pads, foam blocks, felt cloth tape or urethane tape. A Nissan Squeak and Rattle Kit (J-43980) is available through your authorized Nissan Parts Department.

CAUTION:
Do not use excessive force as many components are constructed of plastic and may be damaged.

NOTE:
Always check with the Parts Department for the latest parts information.
The following materials are contained in the Nissan Squeak and Rattle Kit (J-43980). Each item can be ordered separately as needed.
URETHANE PADS [1.5 mm (0.059 in) thick]
Insulates connectors, harness, etc.
76268-9E005: 100 × 135 mm (3.94 × 5.31 in)/76884-71L01: 60 × 85 mm (2.36 × 3.35 in)/76884-71L02: 15 × 25 mm (0.59 × 0.98 in)
INSULATOR (Foam blocks)
Insulates components from contact. Can be used to fill space behind a panel.
73982-9E000: 45 mm (1.77 in) thick, 50 × 50 mm (1.97 × 1.97 in)/73982-50Y00: 10 mm (0.39 in) thick, 50 × 50 mm (1.97 × 1.97 in)

INSULATOR (Light foam block)
80845-71L00: 30 mm (1.18 in) thick, 30 × 50 mm (1.18 × 1.97 in)
FELT CLOTHTAPE
Used to insulate where movement does not occur. Ideal for instrument panel applications.
68370-4B000: 15 × 25 mm (0.59 × 0.98 in) pad/68239-13E00: 5 mm (0.20 in) wide tape roll
The following materials, not found in the kit, can also be used to repair squeaks and rattles.
UHMW (TEFLON) TAPE
Insulates where slight movement is present. Ideal for instrument panel applications.
SILICONE GREASE
Used in place of UHMW tape that will be visible or not fit. Will only last a few months.
SILICONE SPRAY
Use when grease cannot be applied.
DUCT TAPE
Use to eliminate movement.

CONFIRM THE REPAIR

Confirm that the cause of a noise is repaired by test driving the vehicle. Operate the vehicle under the same conditions as when the noise originally occurred. Refer to the notes on the Diagnostic Worksheet.

Generic Squeak and Rattle Troubleshooting

AIS0061B

Refer to Table of Contents for specific component removal and installation information.

INSTRUMENT PANEL

Most incidents are caused by contact and movement between:

1. The cluster lid A and instrument panel
2. Acrylic lens and combination meter housing
3. Instrument panel to front pillar garnish
4. Instrument panel to windshield
5. Instrument panel mounting pins
6. Wiring harnesses behind the combination meter
7. A/C defroster duct and duct joint

These incidents can usually be located by tapping or moving the components to duplicate the noise or by pressing on the components while driving to stop the noise. Most of these incidents can be repaired by applying felt cloth tape or silicon spray (in hard to reach areas). Urethane pads can be used to insulate wiring harness.

CAUTION:
Do not use silicone spray to isolate a squeak or rattle. If you saturate the area with silicone, you will not be able to recheck the repair.

CENTER CONSOLE

Components to pay attention to include:

1. Shifter assembly cover to finisher
2. A/C control unit and cluster lid C
3. Wiring harnesses behind audio and A/C control unit

The instrument panel repair and isolation procedures also apply to the center console.

DOORS

Pay attention to the:

1. Finisher and inner panel making a slapping noise
2. Inside handle escutcheon to door finisher
3. Wiring harnesses tapping
4. Door striker out of alignment causing a popping noise on starts and stops

Tapping or moving the components or pressing on them while driving to duplicate the conditions can isolate many of these incidents. You can usually insulate the areas with felt cloth tape or insulator foam blocks from the Nissan Squeak and Rattle Kit (J-43980) to repair the noise.

TRUNK

Trunk noises are often caused by a loose jack or loose items put into the trunk by the owner.
In addition look for:

1. Trunk lid dumpers out of adjustment
2. Trunk lid striker out of adjustment
3. The trunk lid torsion bars knocking together
4. A loose license plate or bracket

Most of these incidents can be repaired by adjusting, securing or insulating the item(s) or component(s) causing the noise.

SUNROOF/HEADLINING

Noises in the sunroof/headlining area can often be traced to one of the following:

1. Sunroof lid, rail, linkage or seals making a rattle or light knocking noise
2. Sunvisor shaft shaking in the holder
3. Front or rear windshield touching headlining and squeaking

Again, pressing on the components to stop the noise while duplicating the conditions can isolate most of these incidents. Repairs usually consist of insulating with felt cloth tape.

SEATS

When isolating seat noise it's important to note the position the seat is in and the load placed on the seat when the noise is present. These conditions should be duplicated when verifying and isolating the cause of the noise.
Cause of seat noise include:

1. Headrest rods and holder
2. A squeak between the seat pad cushion and frame
3. The rear seatback lock and bracket

These noises can be isolated by moving or pressing on the suspected components while duplicating the conditions under which the noise occurs. Most of these incidents can be repaired by repositioning the component or applying urethane tape to the contact area.

UNDERHOOD

Some interior noise may be caused by components under the hood or on the engine wall. The noise is then transmitted into the passenger compartment.
Causes of transmitted underhood noise include:

1. Any component mounted to the engine wall
2. Components that pass through the engine wall
3. Engine wall mounts and connectors
4. Loose radiator mounting pins
5. Hood bumpers out of adjustment
6. Hood striker out of adjustment

These noises can be difficult to isolate since they cannot be reached from the interior of the vehicle. The best method is to secure, move or insulate one component at a time and test drive the vehicle. Also, engine RPM or load can be changed to isolate the noise. Repairs can usually be made by moving, adjusting, securing, or insulating the component causing the noise.

Diagnostic Worksheet

AIS0061C

SQUEAK & RATTLE DIAGNOSTIC WORKSHEET

Dear Nissan Customer:
We are concerned about your satisfaction with your Nissan vehicle. Repairing a squeak or rattle sometimes can be very difficult. To help us fix your Nissan right the first time, please take a moment to note the area of the vehicle where the squeak or rattle occurs and under what conditions. You may be asked to take a test drive with a service advisor or technician to ensure we confirm the noise you are hearing.

I. WHERE DOES THE NOISE COME FROM? (circle the area of the vehicle)
The illustrations are for reference only, and may not reflect the actual configuration of your vehicle.

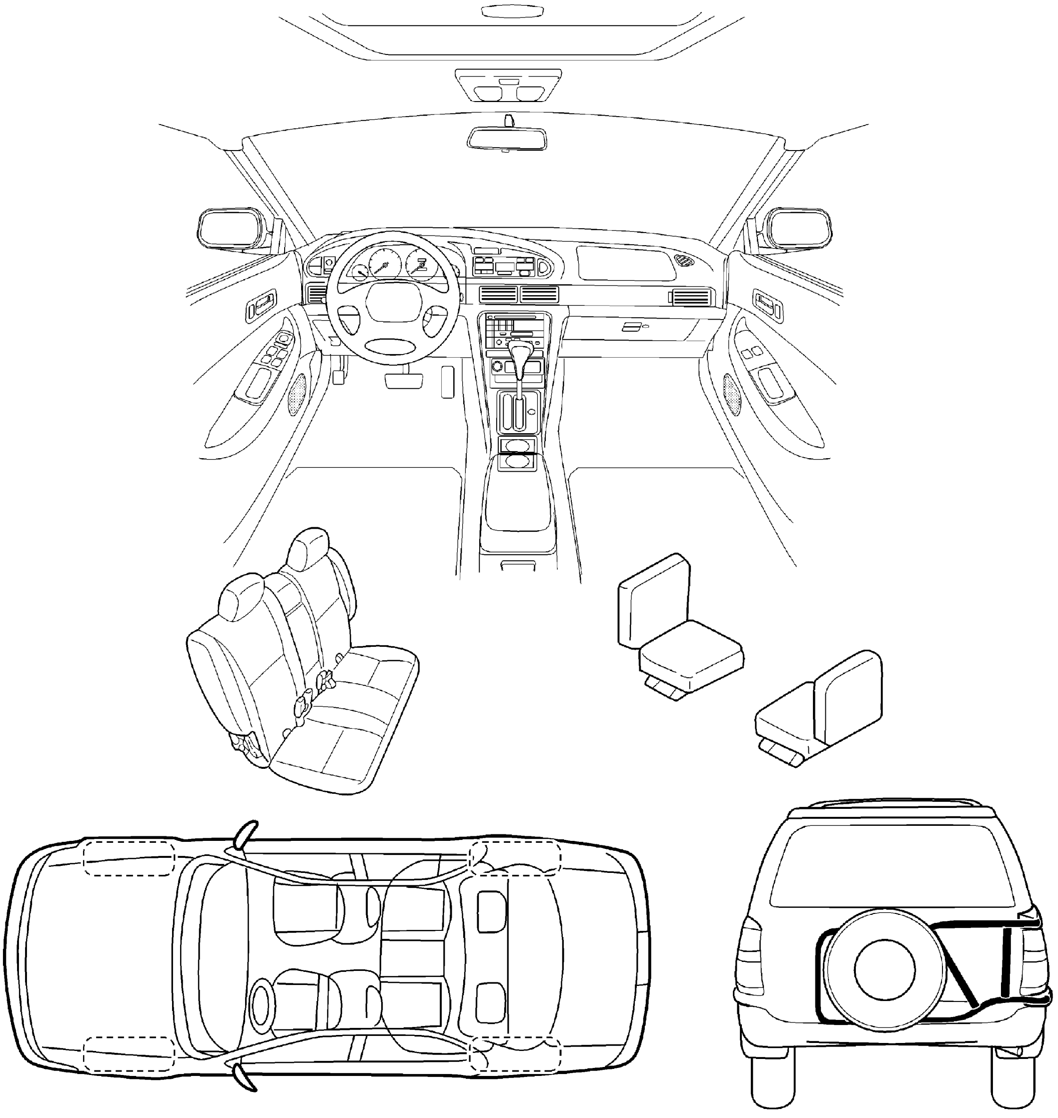

Continue to the back of the worksheet and briefly describe the location of the noise or rattle. In addition, please indicate the conditions which are present when the noise occurs.

PIIB0723E

SQUEAK & RATTLE DIAGNOSTIC WORKSHEET- page 2

Briefly describe the location where the noise occurs:

____

____

II. WHEN DOES IT OCCUR? (check the boxes that apply)

- ❏ anytime
- ❏ 1st time in the morning
- ❏ only when it is cold outside
- ❏ only when it is hot outside
- ❏ after sitting out in the sun
- ❏ when it is raining or wet
- ❏ dry or dusty conditions
- ❏ other: ______________________

III. WHEN DRIVING:

- ❏ through driveways
- ❏ over rough roads
- ❏ over speed bumps
- ❏ only at about ____ mph
- ❏ on acceleration
- ❏ coming to a stop
- ❏ on turns : left, right or either (circle)
- ❏ with passengers or cargo
- ❏ other: ________________
- ❏ after driving ____ miles or ____ minutes

IV. WHAT TYPE OF NOISE?

- ❏ squeak (like tennis shoes on a clean floor)
- ❏ creak (like walking on an old wooden floor)
- ❏ rattle (like shaking a baby rattle)
- ❏ knock (like a knock on a door)
- ❏ tick (like a clock second hand)
- ❏ thump (heavy, muffled knock noise)
- ❏ buzz (like a bumble bee)

TO BE COMPLETED BY DEALERSHIP PERSONNEL
Test Drive Notes:

____

____

	YES	NO	Initials of person performing
Vehicle test driven with customer	❏	❏	_______
- Noise verified on test drive	❏	❏	
- Noise source located and repaired	❏	❏	_______
- Follow up test drive performed to confirm repair	❏	❏	_______

VIN: ____________________ Customer Name: ______________________________

W.O. #: __________________ Date: ___________

This form must be attached to Work Order

SBT844

INSTRUMENT PANEL ASSEMBLY

PFP:68200

Component Parts Location

AIS005SU

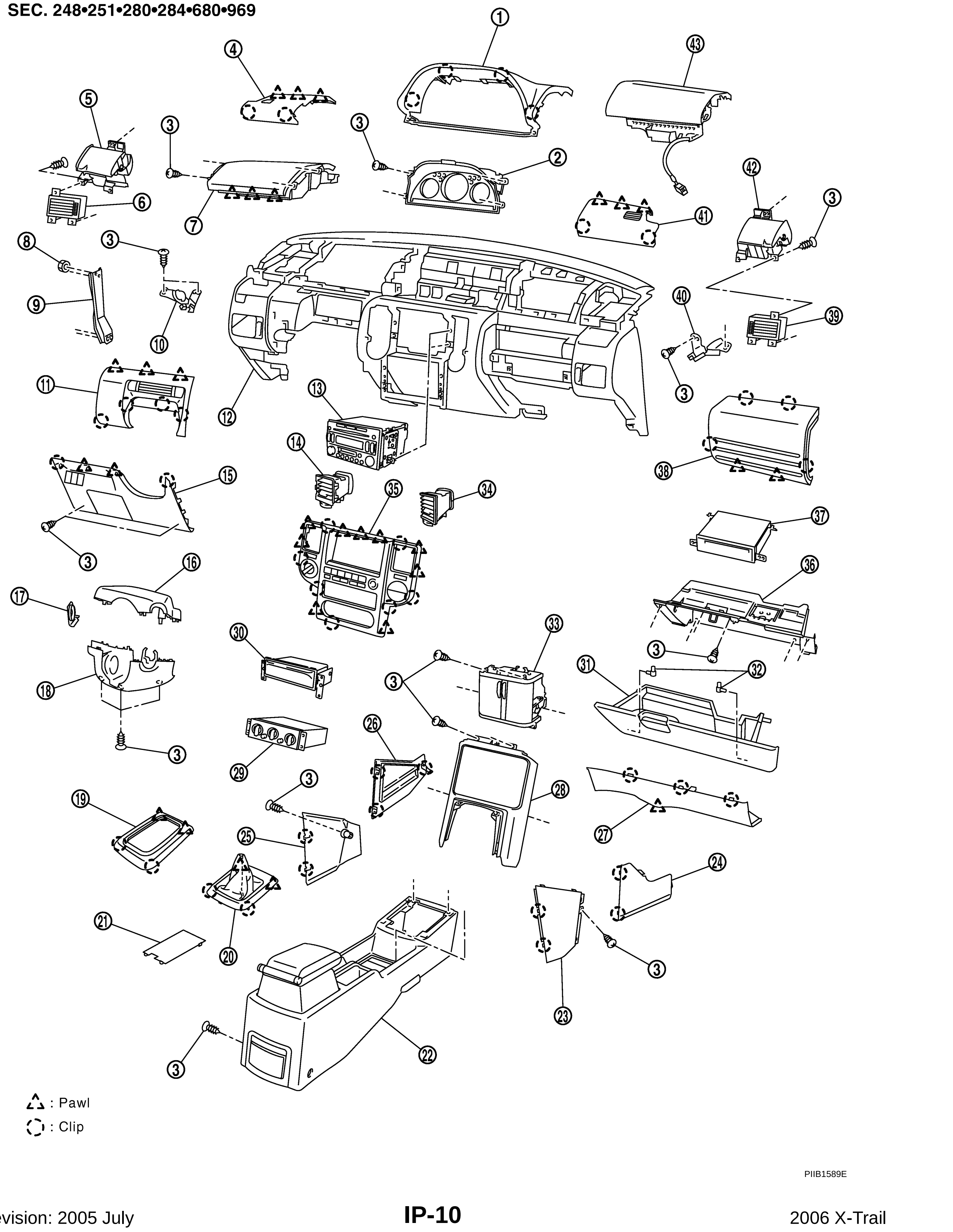

1. Cluster lid A
2. Combination meter
3. Screw
4. Front speaker grille (LH)
5. Cup holder (LH)
6. Side ventilator grille (LH)
7. Driver box
8. Nut
9. Instrument stay
10. Tweeter (LH)
11. Instrument panel finisher
12. Instrument panel
13. Display unit
14. Center ventilator grille (LH)
15. Instrument driver lower panel
16. Steering column cover (upper)
17. Steering lock escutcheon
18. Steering column cover (lower)
19. A/T control finisher (A/T)
20. Console boot (M/T)
21. Console mask
22. Center console
23. Instrument panel stay cover (RH)
24. Instrument panel lower cover (RH)
25. Instrument panel stay cover (LH)
26. Instrument panel lower cover (LH)
27. Instrument lower panel
28. Cluster lid finisher
29. A/C controller
30. Pocket deck
31. Glove box
32. Glove box pin
33. Instrument center lower panel
34. Center ventilator grille (RH)
35. Cluster lid C
36. Glove box cover
37. NAVI control unit
38. Upper glove box
39. Side ventilator grille (RH)
40. Tweeter (RH)
41. Front speaker grille (RH)
42. Cup holder (RH)
43. Front passenger air bag module

Removal and Installation

AIS005SV

WORK ITEM TABLE

Component Parts Location	Refer to	Instrument panel	Combination meter	Console
Front speaker grille (LH/RH)	AV-13	[1]		
Cluster lid “A”	IP-12	[2]	[1]	
Combination meter	IP-12	[3]	[2]	
Driver box	IP-13	[4]		
Steering lock escutcheon, steering column cover (upper/lower)	IP-13	[5]		
Instrument driver lower panel	IP-13	[6]		
Instrument panel finisher	IP-13	[7]		
A/T control finisher (A/T)/Console boot (M/T)	IP-14 IP-14	[8]		[1]
Center console	IP-14	[9]		[2]
Cluster lid “C”	IP-15	[10]		
Pocket deck	IP-15	[11]		
A/C controller	MTC-61	[12]		
Instrument lower panel	IP-15	[14]		
Instrument panel lower cover (LH/RH)	IP-15	[15]		
Instrument panel stay cover (LH/RH)	IP-16	[16]		
Cluster lid finisher	IP-16	[17]		
Instrument center lower panel	IP-16	[18]		
Glove box	IP-16	[19]		
Glove box cover	IP-17	[20]		
Upper glove box	IP-17	[21]		
Front passenger air bag module	SRS-35	[23]		
Front pillar garnish	EI-37	[24]		
Instrument panel	IP-17	[25]		
Side ventilator grille (LH/RH)	ATC-116	[26]		
Cup holder (LH/RH)	IP-18	[27]		

[ ]: The number shows the removal order.

REMOVAL

Front Speaker Grille (LH/RH)

1. Insert a remover into front speaker grille door side edge, and then disengage pawls and clips.
2. Pull forward and remove.

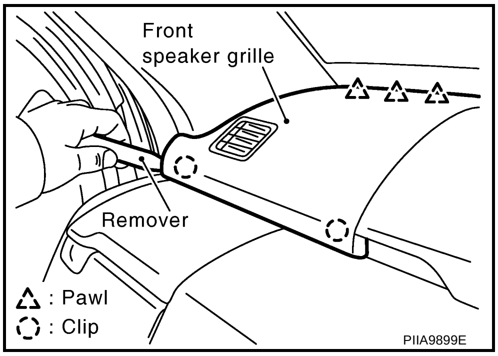

Cluster Lid A

Disengage clips by pulling cluster lid A frontward to remove.

CAUTION:

During removal or installation, use shop cloth to protect surrounding area from damage.

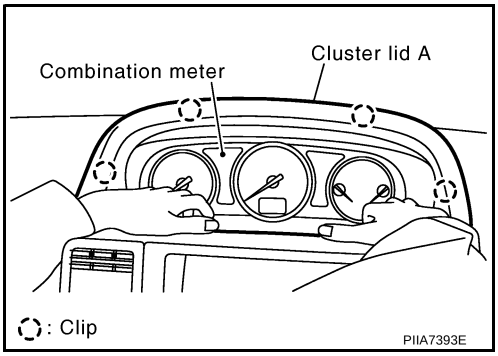

Combination Meter

1. Remove screw.
2. Disconnect connector on back and remove combination meter.

   CAUTION:

   During removal or installation, use shop cloth to protect surrounding area from damage.

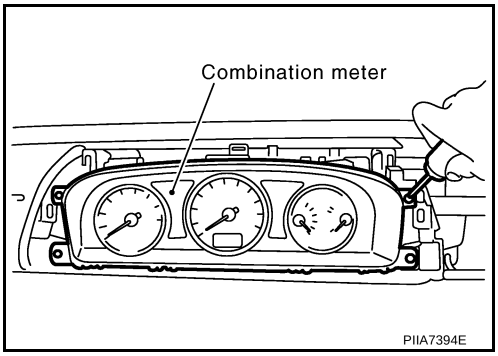

Driver Box

1. Remove screws.

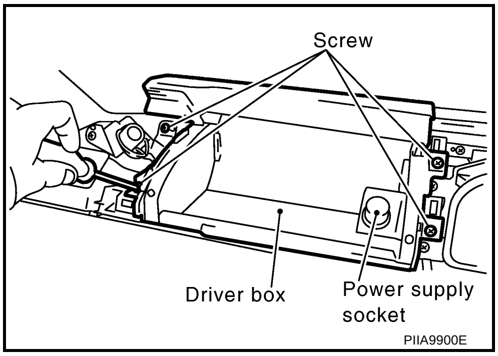

2. Hold driver box up, and then remove pawls.
3. Pull driver box forward to remove.
4. Disconnect power supply socket connector and lamp connector.

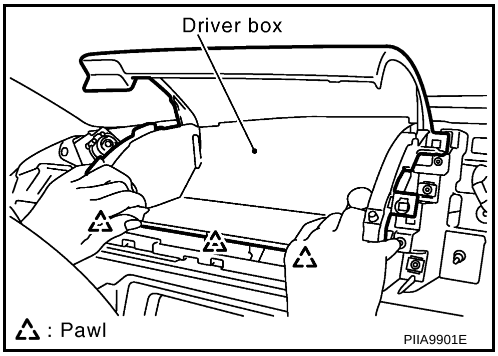

Steering Lock Escutcheon, Steering Column Cover (Upper/Lower)

1. Remove steering lock escutcheon.
2. Remove screw from the bottom of steering column cover (lower).
3. Remove steering column cover (lower) and steering column cover (upper).

Instrument Driver Lower Panel

1. Remove fuse block lid.
2. Remove screws with power tool, and pull instrument driver lower panel straight forward to disengage pawls and clips.
3. Insert a screwdriver wrapped with a shop cloth from back to lower side of each switch to disengage lower tabs, and then remove each switch.
4. Disconnect connector from each switch.

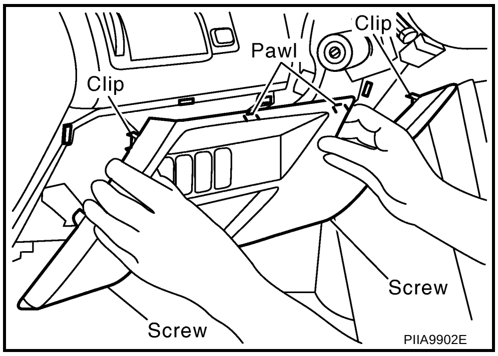

Instrument Panel Finisher

1. Disengage pawl and clips, and then pull instrument panel finisher straight forward.
2. Remove screws on back of instrument panel finisher, and then remove driver ventilator grille. Refer to ATC-116, "Removal of Driver Ventilator Grille" .

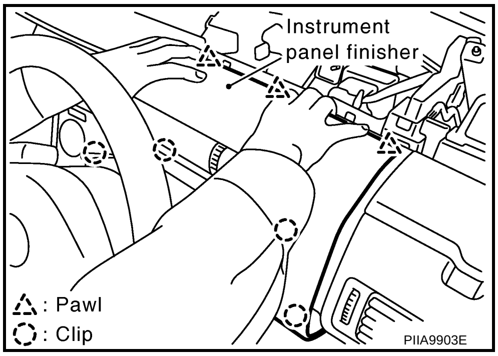

A/T Control Finisher (A/T Models)

1. Insert a screwdriver wrapped with a shop cloth into cutout of finisher front end and hold it up, and then disengage clips of side surface rear end.
2. Pull up and remove.

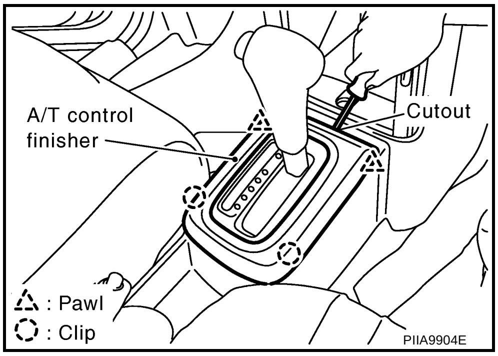

Console Boot (M/T Models)

1. Remove by rotating shift knob.
2. Hold it from console boot inside and pull up to remove.

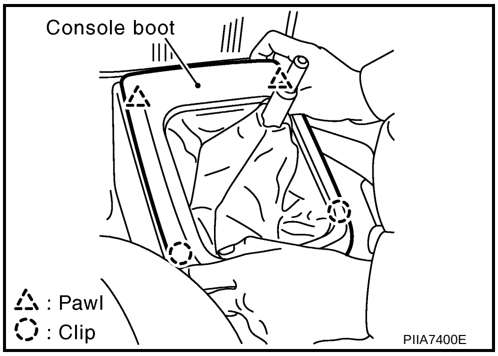

Center Console

1. Hold the protrusion of console mask from the bottom of parking brake lever, and then remove console mask.

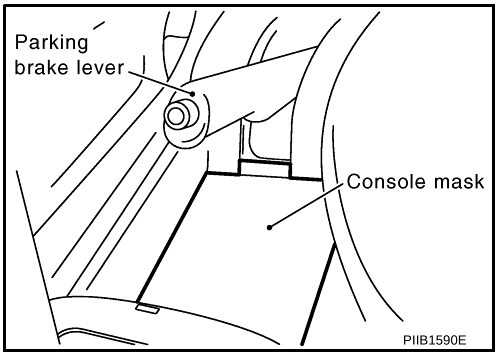

2. Remove screw.
3. Disengage center console front pawls, and then remove center console while avoiding parking lever.

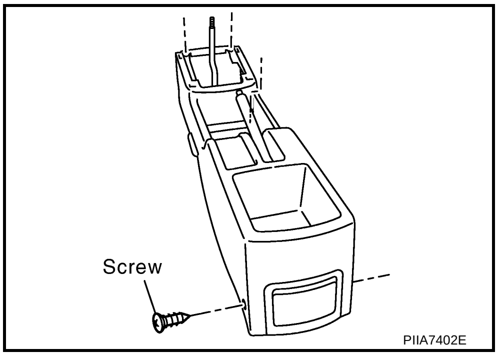

Cluster Lid C

1. Insert a remover into the bottom of cluster lid “C”, and then disengage pawls and clips.
2. Pull cluster lid C straight frontward to remove.
3. Disconnect all connectors.
4. Remove center ventilator grille (LH/RH). Refer to ATC-115, "Removal of Center Ventilator Grilles" .

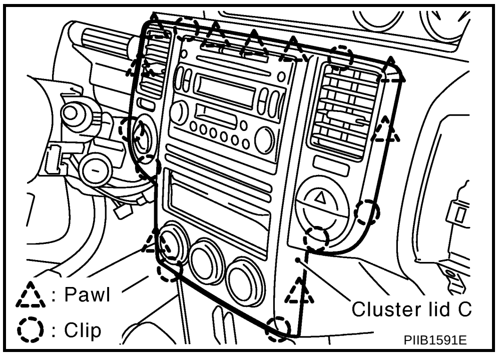

Pocket Deck

Remove screws, and then remove pocket deck.

Audio, A/C Controller

Remove screws, and then remove A/C controller. Refer to MTC-61, "CONTROLLER" .

CAUTION:

During removal or installation, use shop cloth to protect surrounding area from damage.

Instrument Lower Panel

1. Disengage pawls and clips, and then pull instrument panel finisher straight forward.
2. Remove screws from the back and remove harness bracket.

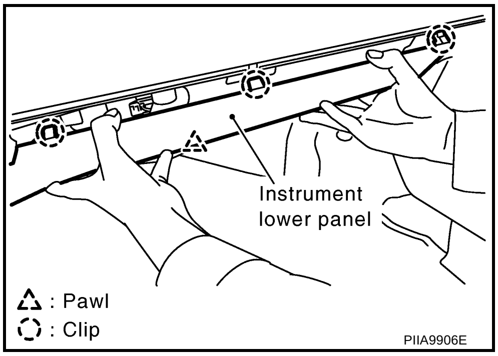

Instrument Panel Lower Cover (LH/RH)

Disengage pawl and clips, and then pull it to rear of vehicle.

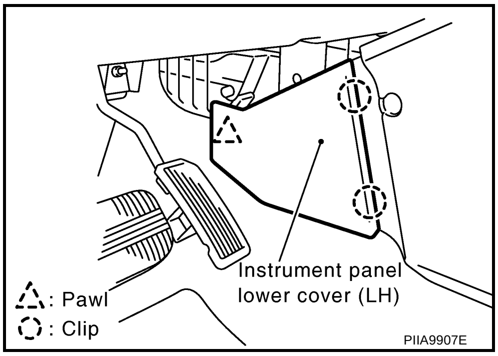

Instrument Panel Stay Cover (LH/RH)

1. Remove screws.
2. Disengage pawls and pull it to outside of vehicle.

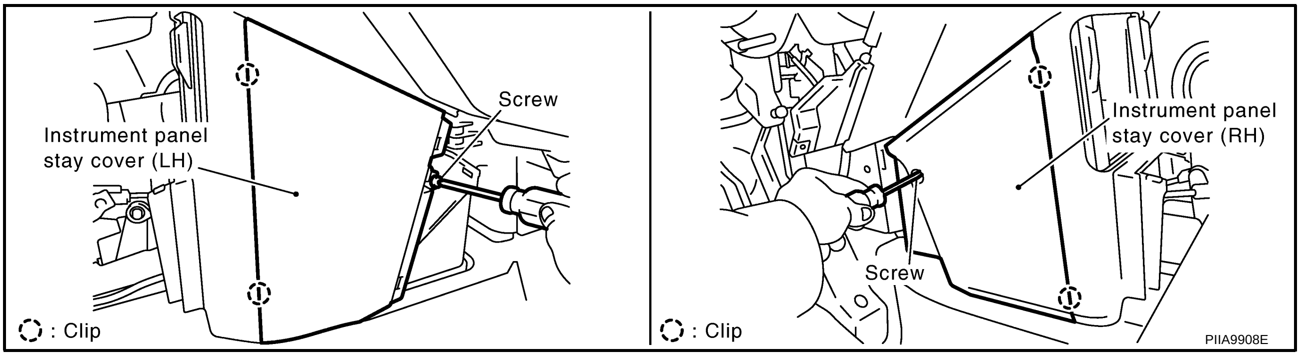

Cluster Lid Finisher

1. Remove screws.
2. Pull the bottom of cluster lid finisher to the rearward of the vehicle, and remove it so as to avoid interference around upper screw holes.

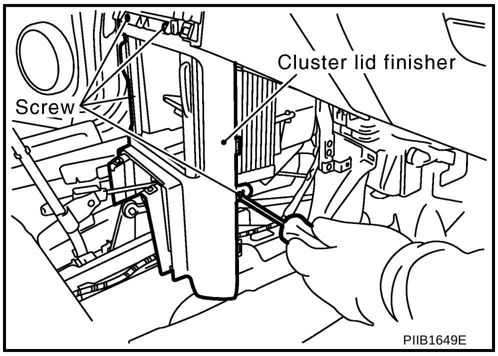

Instrument Center Lower Panel

Remove screws, and then pull it forward to remove.

CAUTION:

During removal or installation, use shop cloth to protect surrounding area from damage.

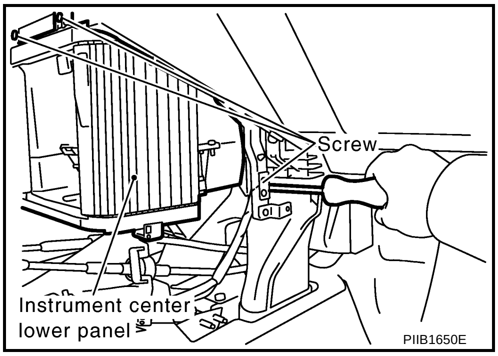

Glove Box

Open glove box, and remove glove box pin from inside.

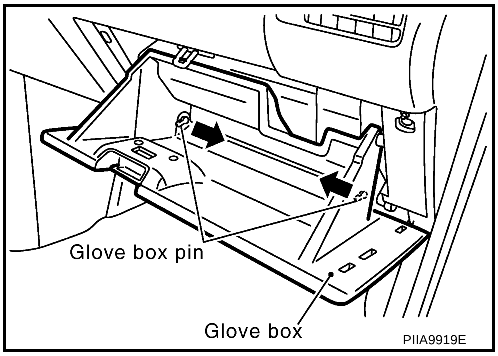

Glove Box Cover

1. Remove screw.
2. Remove relay clamp installed to back of glove box cover.
3. Pull it forward to remove.

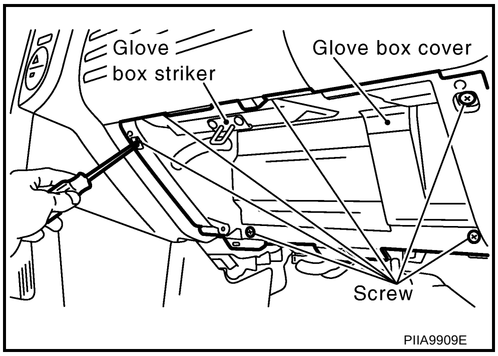

Upper Glove Box

Disengage pawls and clips, and then pull it straight forward.

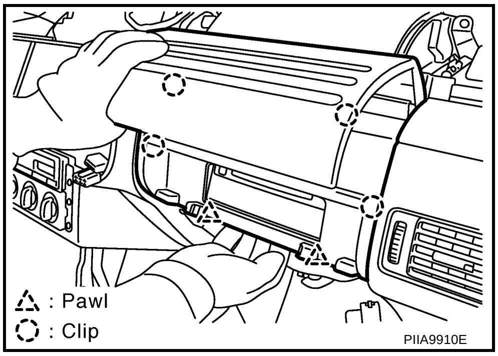

Front Passenger Air Bag Module

Remove passenger air bag module after removing bolts. Refer to SRS-35, "FRONT PASSENGER AIR BAG MODULE" .

Front Pillar Garnish

Pull straight front pillar garnish toward vehicle inside of right and left. Remove metal clip to remove.
Refer to EI-37, "FRONT PILLAR GARNISH" .

Instrument Panel

1. Remove nuts, and lower steering column.

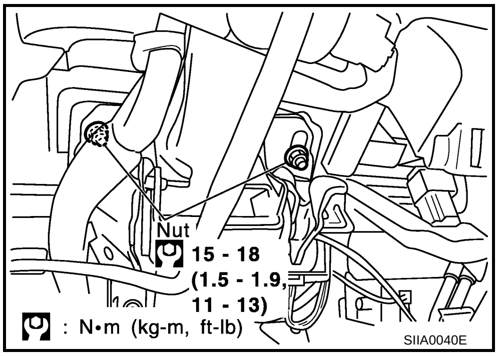

2. Remove instrument panel by removing all harnesses, bolts, nuts, and screw.

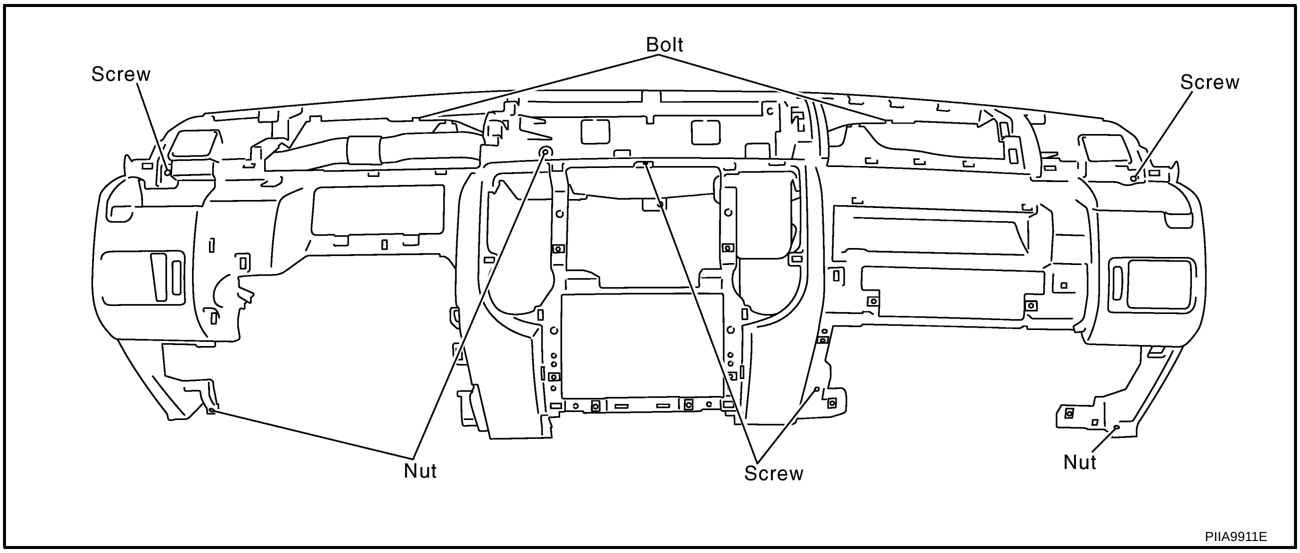

Side Ventilator Grille (LH/RH)

1. Remove front driver side ventilator duct and front passenger side ventilator duct. Refer to ATC-116, "Removal of Defroster Nozzle, Ducts and Side Ventilator Ducts" .
2. Remove front driver side ventilator and front passenger side ventilator. Refer to ATC-116, "Removal of Side Ventilator Grilles" .

Cup Holder (LH/RH)

Remove screws and remove cup holder.

INSTALLATION

Install in the reverse order of removal.

Disassembly and Assembly

AIS005SW

CENTER CONSOLE

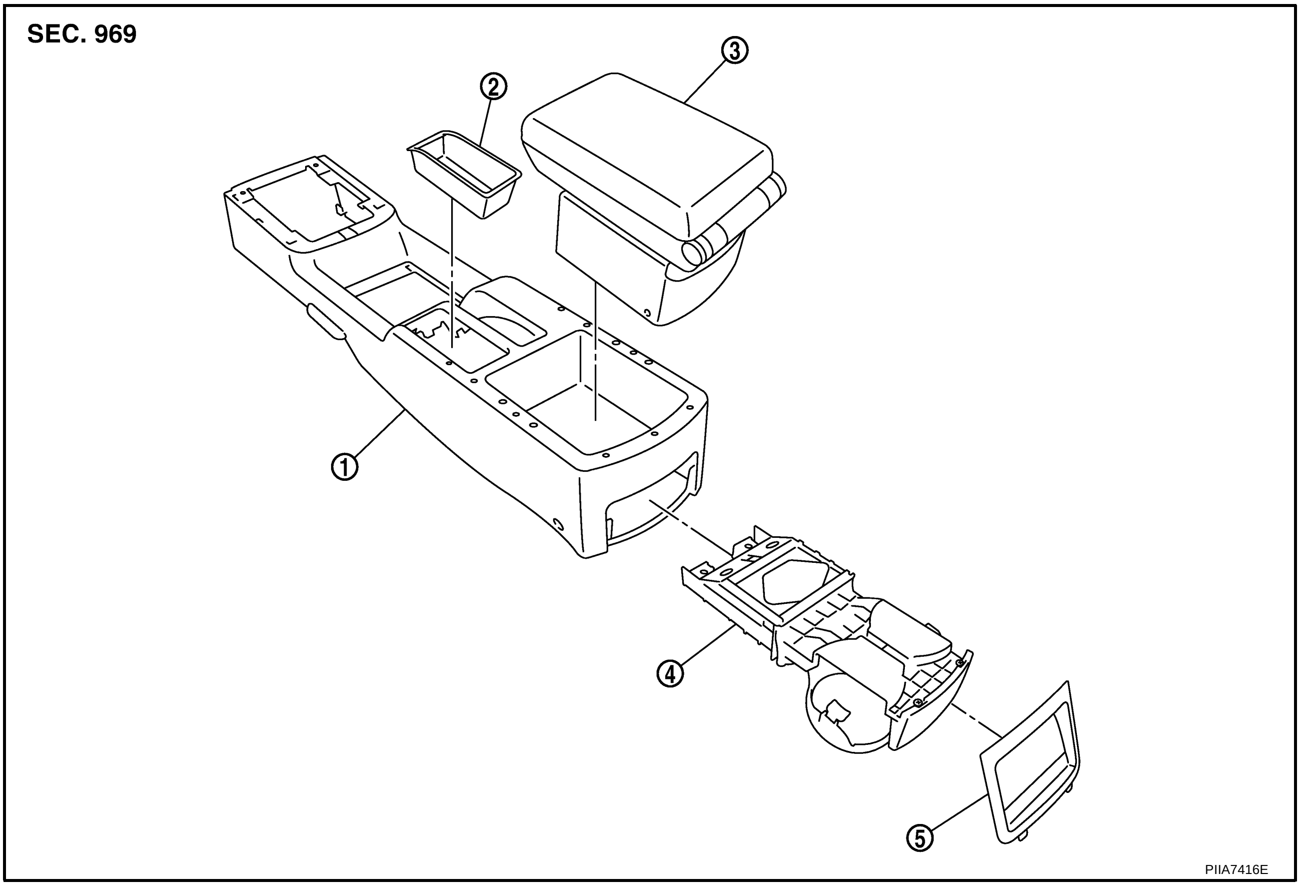

1. Console box
2. Console pocket / switch panel
3. Console lid
4. Rear cup holder
5. Console rear finisher

Disassembly

1. Remove console rear finisher by pulling rear cup holder out approximately 5 mm (0.2 in) rearward.

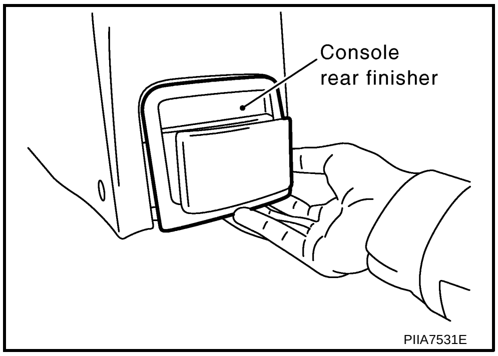

2. Remove screws from back of center console, and then pull rear cup holder rearward to remove.

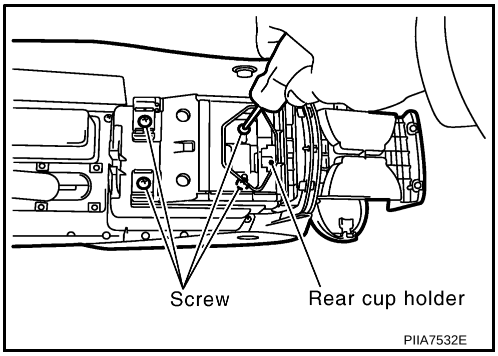

A
B
C
D
E
F
G
H
IP
J
K
L
M

3. Remove screws from back of center console, and then remove console lid.

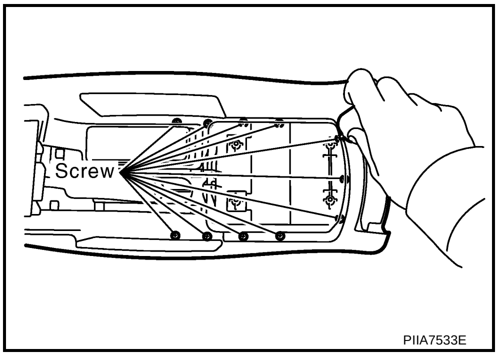

4. Remove console pocket.

Assembly

Assemble in the reverse order of disassembly.